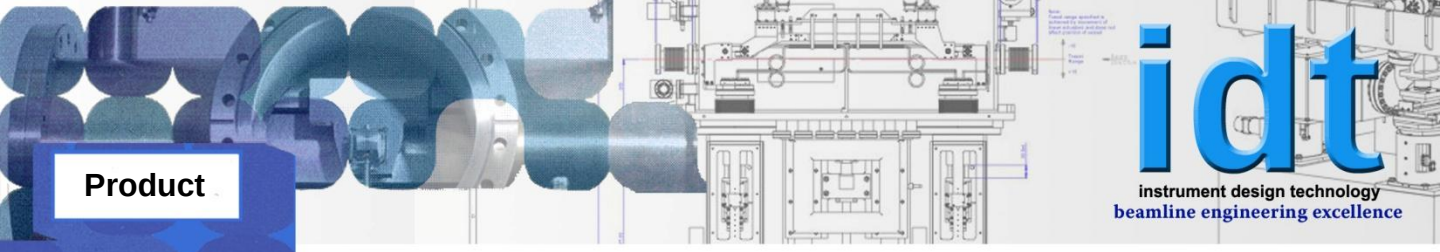

Product

Undulator Primary Slits

Features

- Precision actuator resolution can be controlled to 0.1µm with 5µm repeatability open loop, sub-micron when fitted with encoder.
- Blade K type thermocouples provided.
- Range of motion Horizontal vertical ±10mm.
- Position resolution <1.0µm.
- Position repeatability <1.0µm.
- Individual blades & bellows baked to 200 °C.
- Installed on Sector 13 & Sector 16 at APS and ID5 at ASP.

Undulator Slits - angled OFHC copper blades (with white beam power densities to >120W/mm^2). Blades are thermally isolated from the Invar mount for maximum stability and minimum drift.

Set slit gap and scan undulator cone via single motor - Two stepper motors are provided in the actuator design. One motor can be used to set the slit blade gap the second motor is used to scan the Undulator cone.

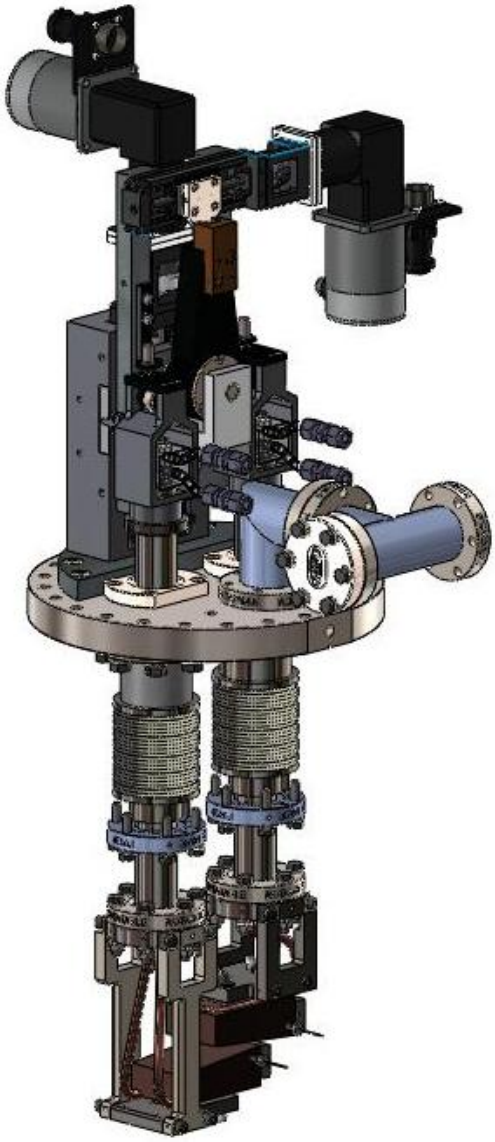

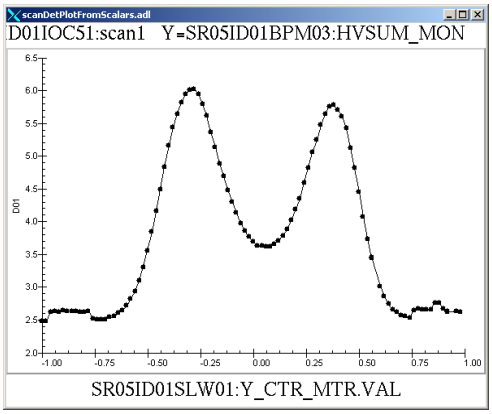

Left: Vertical Slit Scan on ID5 Micro-spectroscopy beamline at the Australian Synchrotron.

Detune the DCM from the undulator 3rd harmonic by -200eV. Scan the vertical white beam slits to show the signature trough profile. The intensity was measured using the sum of the quad-diode BPM using the Cu foil.

WBS, Vp scan, Vw = .02, Hw = .5, step = .02, Mono = Und + 81.1-200, Center = 0.05 mm

Instrument Design Technology Ltd
Unit 2, Turnstone Business Park,
Mulberry Avenue, Widnes,
Cheshire, WA8 0WN, England.

Queries?
email: murray@idtnet.co.uk
Tel: +44 (0)151 601 4111
Fax: +44 (0)151 601 4110

www.idtnet.co.uk

Copyright © 2009 Instrument Design Technology Ltd.